| Teileliste | | | | |
|---|---|---|---|---|
| Element | Anz. | Bauteilnummer | Beschreibung | Material |
| 1 | 2 | Bein | 812x54x54; 14612119 | Kiefer |
| 2 | 1 | Seitenplatte links | 800x250x18; 23141003; 1St;<br>800x300x18; 23141012; 1St | Kiefer |
| 3 | 5 | TSS4613SC-400 | B09J18JV1P | Stahl |
| 4 | 15 | Stahlia<br>B0C7ZJ6NY1 | B0C7ZJ6NY1 | Stahl |

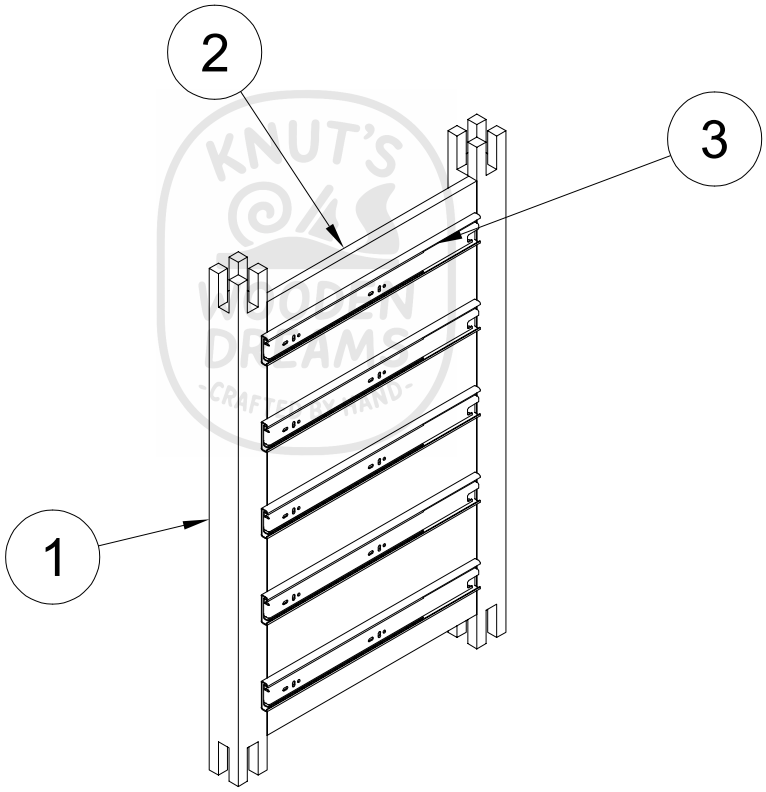


| Dept. | Technical reference | Created by<br>Knut Welzel 17.01.2024 | Approved by | |
|---|---|---|---|---|
| | | Document type | Document status | |
| | | Title<br>**Standardtisch Beine links** | DWG No. | |
| | | | Rev. / Date of issue | Sheet<br>3 |